DMX CONTROL 24 PRO CT

Table of contents

1. Safety instructions **4**
2. Operating determinations **4**
3. Description of the device **5**
4. Installation **7**
4.1.Sound-control 7
4.2.DMX-512 connection with the projectors 7
4.3 Fixture addressing 8
4.4 Connection to the mains 8
5. Operation **8**
6. Technical specifications **10**
7. Cleaning and maintenance **10**
8. Appendix **10**

CAUTION!
Keep this device away from rain and moisture!
Unplug mains lead before opening the housing!

FOR YOUR OWN SAFETY, PLEASE READ THIS USER MANUAL CAREFULLY BEFORE YOU INITIAL START - UP!

1. Safety instructions

Every person involved with installation and maintenance of this device have to:
- be qualilfied
- follow the instructions of this manual

CAUTION!
Be careful with your operations. With a high voltage you can suffer a dangerous electric shock when touching the wires!

This device has left our premises in absolutely perfect condition. In order to maintain this condition and to ensure a safe operation, it is absolutely necessary for the user to follow the safety instructions and warning notes written in this manual.

Important:

The manufacturer will not accept liability for any resulting damages caused by the non-observance of this manual or any unauthorized modification to the device.

Please consider that damages caused by manual modifications to the device are not subject to warranty.

Never let the power-cord come into contact with other cables! Handle the power-cord and all connections with the mains with particular caution!

Always plug in the power plug least. The power-plug has to be accessable after installing the device.

Make sure that the power-cord is never crimped or damaged by sharp edges. Check the device and the power-cord from time to time.

Always disconnect from the mains, when the device is not in use or before cleaning it. Only handle the power-cord by the plug. Never pull out the plug by tugging the power-cord.

This device falls under protection class I. Therefore it is essential to connect the yellow/green conductor to earth.

The electric connection, repairs and servicing must be carried out by a qualified employee.

2. Operating determinations

This device was designed for indoor use only.

If the device has been exposed to drastic temperature fluctuation (e.g. after transportation), do not switch it on immediately. The arising condensation water might damage your device. Leave the device switched off until it has reached room temperature.

When taking the device into operation, please make sure that the housing is closed firmly with all the necessary screws tightened up.

Do not shake the device. Avoid brute force when installing or operating the device.

When choosing the installation-spot, please make sure that the device is not exposed to extreme heat, moisture

or dust. There should not be any cables lying around. You endanger your own and the safety of others!

Operate the device only after having familiarized with its functions. Do not permit operation by persons not qualified for operating the device. Most damages are the result of unprofessional operation!

Please use the original packaging if the device is to be transported.

Please consider that unauthorized modifications on the device are forbidden due to safety reasons!

If this device will be operated in any way different to the one described in this manual, the product may suffer damages and the guarantee becomes void. Furthermore, any other operation may lead to dangers like short-circuit, electric shock, etc.

3. Description of the device

Rear panel:

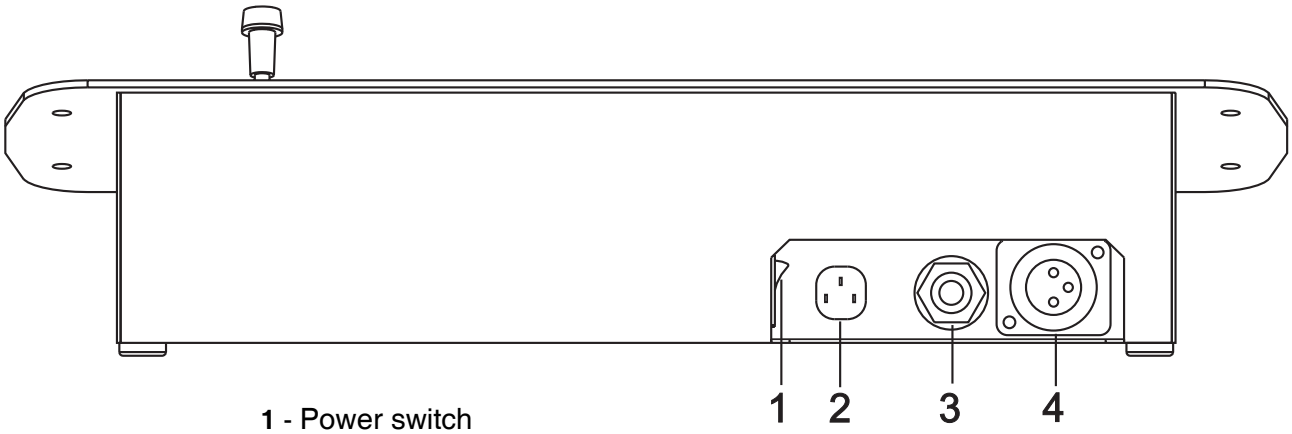

1 - Power switch
2 - Power supply socket
3 - Audio-input socket
4 - DMX-output socket

Top panel:

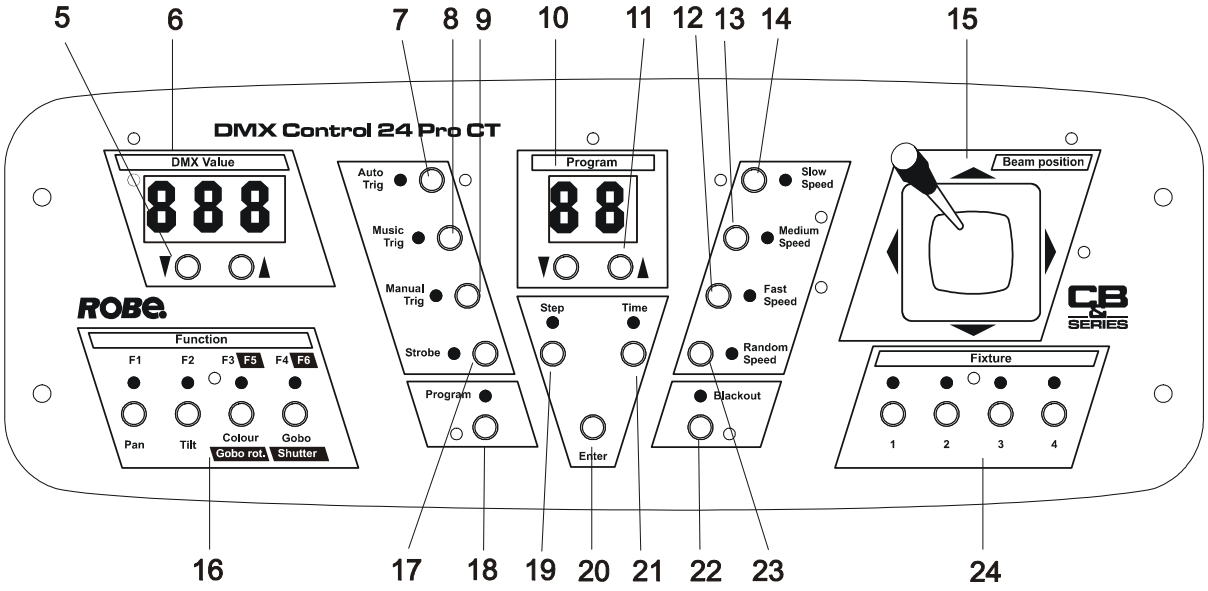

5 - DMX VALUE UP/DOWN BUTTONS
For setting DMX value.

6 - DMX VALUE- DISPLAY
Shows current DMX value.
7 - AUTO TRIG BUTTON
If the LED shines, the controller is in Auto-mode (normal operation without sound-control).
8 - MUSIC TRIG BUTTON
If this LED shines the controller is in Audio-mode (operation with sound-control).
9 - MANUAL TRIG BUTTON
With the Manual Trig -button, you can jump from one step to another.
10 - PROGRAM-DISPLAY
Shows program steps.
11 - PROGRAM UP/DOWN BUTTONS
For selecting the program.
12 - FAST SPEED BUTTON
For adjusting the program to fast movement.
13 - MEDIUM SPEED BUTTON
For adjusting the program to medium movement.
14 - SLOW SPEED BUTTON
For adjusting the program to slow movement.
15 - JOYSTICK
With the joystick you can move the light beam manually.
16 - FUNCTION BUTTONS
The buttons F3 and F4 have two functions: F3/F5 (Colour/gobo-rotation), F4/F6 (gobo/shutter)
17 - STROBE BUTTON
By pressing the Strobe-key all fixtures are being strobed.
18 - PROGRAM BUTTON
Button for programming.
19 - STEP BUTTON
Button for modification of programs.
20 - ENTER BUTTON
Confirming button for programming.
21 - TIME BUTTON
Button for setting of minimum period of last program.step in SLOW, MEDIUM and FAST modes.
22 - BLACKOUT BUTTON
The Blackout-function closes the light output of all connected projectors via the shutter.
Caution: The Blackout-key has to be pressed (LED is off), as soon as a program is called up.
Otherwise there will not be any light output.
23 - RANDOM SPEED BUTTON
For adjusting the program to random movement.
24 - FIXTURE SELECT BUTTONS
With the fixture select buttons you can choose the desired projector.

4. Installation

4.1.Sound-control

The sound-control either works via the L" mono jack-socket or the built-in microphone.
If the DMX CONTROL 24 PRO CT is supposed to work via a soundsignal at the Audio In-socket, connect the L" jack socket with the soundsignal of your headphones output or a second adjustable output (if existing) of your mixer, or with the loud-speaker output of your amplifier.

Tip:	Data +
Sleeve:	Ground

Caution: Never connect the sound input with the DMX-output, as this will destroy the electric (DMX-driver).

4.2.DMX-512 connection with the projectors

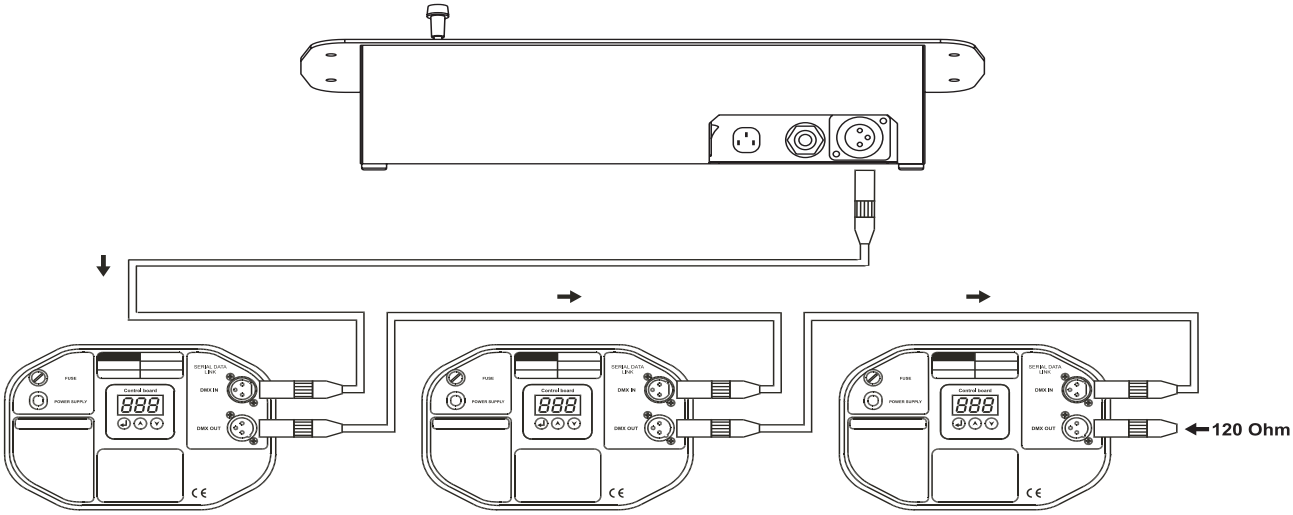

Only use a stereo shielded cable and 3-pin XLR-plugs and connectors in order to connect the controller with the fixture or one fixture with another.

Occupation of the XLR-connection:

DMX - output
XLR mounting-socket:

1 - Ground
2 - Signal (-)
3 - Signal (+)

DMX-input
XLR mounting-plug:

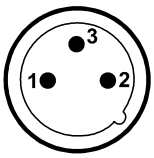

1 - Ground
2 - Signal (-)
3 - Signal (+)

If you are using the standard controllers, you can connect the DMX-output of the controller directly with the DMX-input of the first fixture in the DMX-chain. If you wish to connect DMX-controllers with other DMX-outputs, you need to use adapter-cables.

Building a serial DMX-chain:

Connect the DMX-output of the DMX CONTROL 24 PRO CT with the DMX-input of the nearest projector. Always connect one output with the input of the next fixture until all fixtures are connected.

Caution: At the last fixture, the DMX-cable has to be terminated with a terminator. Solder a 120 ohms resistor between Signal (–) and Signal (+) into a 3-pin XLR-plug and plug it in the DMX-output of the last fixture.

4.3 Fixture addressing

Projector addressing

Please note that the DMX CONTROL 24 PRO CT assigns the DMX-starting addresses every 6 steps. You have to address every projector to the respective starting address. Otherwise, the channel assignment will not be correct. All projectors with the same starting address work synchronically.

Projector	Starting address	Projector	Starting address
Projector 1	1	Projector 3	13
Projector 2	7	Projector 4	19

4.4 Connection to the mains

Connect the fixture to the mains with the power-plug.
The occupation of the connection-cables is as follows:

Cable (EU)	Cable (US)	Pin	International
Brown	Black	Live	L
Light blue	White	Neutral	N
Yellow/Green	Green	Earth	⏚

The earth has to be connected!

5. Operation

Preparation-adjusting mode

Press and hold the PROGRAM UP/DOWN-buttons for 5 seconds and switch on the POWER-switch at the same time .The PROGRAM,STEP and TIME- button flashes.The PROGRAM-DISPLAY shows the current DMX channel and the DMX VALUE-DISPLAY shows setting value for this channel. Now you can browse through the channels by pressing PROGRAM UP/DOWN-button and check the function assignments(pan,tilt...) and effect assignments(strobe,blackout...)to each channel.You can assign the channel to the desired button by pressing the PAN, TILT, COLOR or GOBO-button. If you wish to assign the next 2 functions (gobo-rotation and shutter/strobe) press and hold the COLOR or GOBO-button until the LED flashes. If you press the STROBE or BLACKOUT-button(BLACKOUT-LED or STROBE-LED shines), the channel will be subject to the BLACKOUT- button or STROBE- button in the standard mode.

NOTE:The STROBE/BLACKOUT buttons are assigned at the channel 6 as default.If you use the e.g. 4 -channels fixture ,you must assign the strobe and blackout functions at the right channels and remove strobe/blackout assigning at channel 6.

Default settings: suitable for the fixtures with 6 control channels (ClubScan 150/250 CT,ClubSpot 150/160 CT

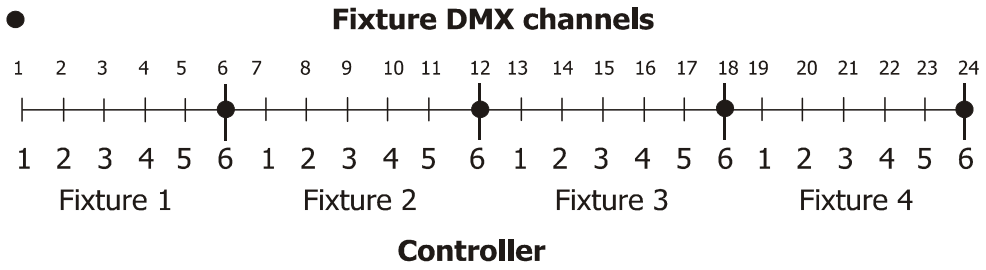

For fixtures with 4 control channels (strobe and blackout at channel 4)

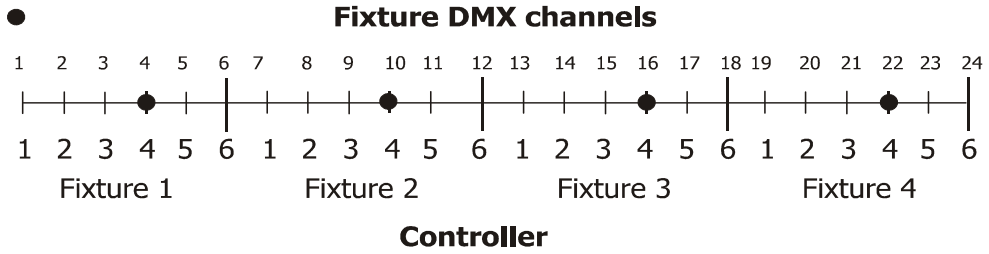

If you want to return to the factory setting, press and hold the STEP and TIME-button at the same time for 10s. If you want delete dedicated the times of the program steps and set the programs no. 21-30 to minimum length (1 step), press and hold the PROGRAM- button and then press the ENTER- button. Hold both buttons until the reset has run (approximately 3 s).
Set up mode is finished by pressing the ENTER- button. Setting all LED diodes in this moment is written in EEPROM and will be used as an initial state of the controller. Before finishing the adjusting mode, check the trigger mode (AUTO, MUSIC, TRIG) and the speed mode (SLOW, MEDIUM, FAST) for every fixture.

Calling up a programs

Select the desired program between 1- 30, **CH**, **rn** via the PROGRAM UP/DOWN buttons.The program runs 1.5 s after showing on the PROGRAM-DISPLAY.
The selection **„CH“** means that the programs 21- 30 will be run through (chain).
The selection **„rn“** means that the programs 21- 30 will be run randomly selected.
Programs from 21 to 30 - freely-programmable chasers.
Programs from 1 to 10 - pre-programed for the projectors with the 6 control channels(ClubScan 150/250 CT).
Programs from 11 to 20 - pre-programed for the moving heads with the 6 control channels(ClubSpot 150/160 CT).

Note:Only programs 21-30 are used for the options "**CH**" and "**rn**"

Adjusting the program-speed

The programs run through the selected program step by step with the programmed speed. You can adjust the program-speed via the SLOW SPEED- button, MEDIUM SPEED- button or FAST SPEED- button.

Jump from one step to another

Via the MANUAL TRIG- button, you have the possibility to jump from one step to another.
If a program is run and the MANUAL TRIG- button is pressed, the projector jumps to the next step after finishing the current step. The MANUAL TRIG-LED shines and the program is stopped.
If you wish to start the program once more, press the AUTO TRIG- button or the MUSIC TRIG- button.

Activating the sound-control

If the sound-control is activated, the program moves in the bass-tact of the music.
Press the MUSIC TRIG- button (LED shines) and the sound-control is activated.

Strobe-function

Via the STROBE-button, you can strobe all fixtures at the same time (You can strobe PAN or TILT position too).

Manual controll of the fixtures

If LED-diode of some FIXTURE button shines, the fixture responds to a joystick movement.You can also change the desired value by pressing the FUNCTION button and the UP/DOWN- buttons on DMX VALUE-DISPLAY.
The function which was changed, does not respond to the running program (function is excluded).
To return the fixture to the program, press the respective FIXTURE button and shortly the PROGRAM- button.
The FIXTURE-LED will switch off, fixture is returned to the program and at the same time the LED diodes of FIXTURES, which are chosen from the program, will shine.
To return all fixtures to the program, press shortly twice the PROGRAM button.

Programming

Choose one of the freely programmable chasers between 21 and 30 with the PROGRAM UP/DOWN buttons. Press and hold the PROGRAM button until its LED flashing. The PROGRAM-DISPLAY shows number of the programmed steps and STEP-LED shines. Now you can set the values of DMX channels for the current step.
Press the TIME button and set time on the PROGRAM-DISPLAY. The TIME-value can be between 0 and 5 sec. This value is the minimum period of last program step in SLOW and MEDIUM mode (waiting on the termination of PAN and TILT movement). The value TIME will be immediately be carried out in the FAST mode (without waiting on the termination of PAN and TILT movement).

Creation of the program

By pressing ENTER- button, the current step is written into memory and simultaneously it is replicated into next step. The STEP-LED shines and the new step is shown.You can repeat this procedure as requested.The maximum number of programmable steps per program is 32.

Modification of the program

In order to enter the programming-mode, press and hold the Program and ENTER-button until the Program-LED is shining. Now you can modify the program.
By pressing the STEP-button, the change is written into memory and the PROGRAM-DISPLAY shows the number

of current step. You can change either step. For example, if you want to shorten the program, set the desired step as last by pressing the STEP- button repeatedly. The little dot shines behind the number of step. If you press the STEP- button again, the little dot will be switched Off. By this procedure you can change all steps.

Completion of programming

Press and hold the ENTER- button and let the PROGRAM-button loose so that the PROGRAM-LED stops flashing. The current step is written into memory and the programming mode is finished.

6. Technical specifications

Power supply:	**100-125V,200-240V AC, 50/60Hz ~**
Power consumption:	**5 W**
Number of control channels:	**24**
Sound control:	**either via L'' Jack or built-in microphone**
Sound input:	**L'' mono Jack**
Audio-sensitivity:	**0.3 - 1 V**
DMX 512-output:	**3-pin XLR-connector**
Pre-programed programs	**20**
Free chasers:	**10 with up to 32 steps**
Weight:	**2 kg**

Dimensions:

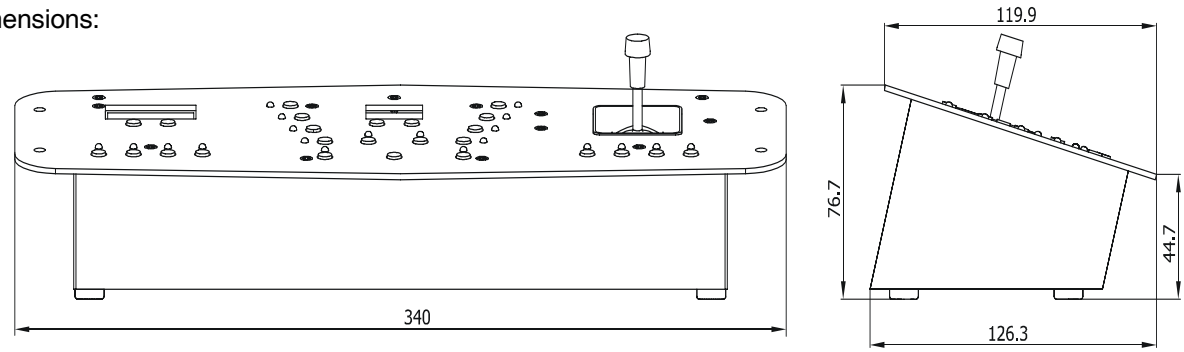

7. Cleaning and maintenance

DANGER!
Disconnect from the mains before starting any maintenance work

We recommend a frequent cleaning of the device. Please use a soft lint-free and moistened cloth. Never use alcohol or solvents!

There are no servicable parts inside the device. More complicated maintenance and service operations are only to be carried out by authorized distributors.

Should you need any spare parts, please use genuine parts.

If the power supply cable of this device will be damaged, it has to be replaced by authorized distributors only in order to avoid hazards.

8. Appendix

We believe you will enjoy your DMX CONTROL 24 PRO CT. We assure you will enjoy this product for years if you follow the instructions given in this manual.

If you have any questions and comments, please do not hesitate to contact us.

Specifications are subject to change without notice.
Version 1.0